The FEBS Journal

FEBS PRESS
science publishing by scientists

STATE-OF-THE-ART REVIEW

New insights into the evolutionary origins of the recombination-activating gene proteins and V(D)J recombination

Lina Marcela Carmona[1] and David G. Schatz[1,2]

1 Department of Immunobiology, Yale University School of Medicine, New Haven, CT, USA
2 Howard Hughes Medical Institute, New Haven, CT, USA

Keywords
evolution; *ProtoRAG*; RAG1; RAG2; RAG-like proteins; Transib; transposition; V(D)J recombination

Correspondence
D. G. Schatz, Department of Immunobiology, Yale University School of Medicine, New Haven, CT 06520-8011, USA
Fax: +1 203 785 3855
Tel: +1 203 737 2255
E-mail: david.schatz@yale.edu

(Received 12 August 2016, revised 10 November 2016, accepted 8 December 2016)

doi:10.1111/febs.13990

The adaptive immune system of jawed vertebrates relies on V(D)J recombination as one of the main processes to generate the diverse array of receptors necessary for the recognition of a wide range of pathogens. The DNA cleavage reaction necessary for the assembly of the antigen receptor genes from an array of potential gene segments is mediated by the recombination-activating gene proteins RAG1 and RAG2. The RAG proteins have been proposed to originate from a transposable element (TE) as they share mechanistic and structural similarities with several families of transposases and are themselves capable of mediating transposition. A number of RAG-like proteins and TEs with sequence similarity to *RAG1* and *RAG2* have been identified, but only recently has their function begun to be characterized, revealing mechanistic links to the vertebrate RAGs. Of particular significance is the discovery of *ProtoRAG*, a transposon superfamily found in the genome of the basal chordate amphioxus. *ProtoRAG* has many of the sequence and mechanistic features predicted for the ancestral RAG transposon and is likely to be an evolutionary relative of *RAG1* and *RAG2*. In addition, early observations suggesting that RAG1 is able to mediate V(D)J recombination in the absence of RAG2 have been confirmed, implying independent evolutionary origins for the two *RAG* genes. Here, recent progress in identifying and characterizing RAG-like proteins and the TEs that encode them is summarized and a refined model for the evolution of V(D)J recombination and the RAG proteins is presented.

Introduction

The antigen receptor genes that give rise to the T-cell receptor, B-cell receptor, and secreted immunoglobulins are comprised of arrays of gene segments. The assembly of these gene segments in a variety of combinations provides a unique source of diversity to the antigen recognition sites of these proteins and is key to

Abbreviations
BbRAG1L, *Branchiostoma belcheri* (Chinese lancelet) RAG1-like; BbRAG2L, *Branchiostoma belcheri* (Chinese lancelet) RAG2-like; BfRAG1L, *Branchiostoma floridae* (Florida lancelet) RAG1-like; H3K4, lysine 4 of histone 3; H3K4me3, trimethylated lysine 4 of histone 3; HMGB1/2, high mobility group protein B1 or B2; Hztransib, Transib element from *Helicoverpa zea* (corn earworm); LvRAG1L, *Lytechinus variegatus* (green sea urchin) RAG1-like; LvRAG2L, *Lytechinus variegatus* (green sea urchin) RAG2-like; NBD, nonamer-binding domain; NHEJ, nonhomologous end joining; N-RAG-TP, transposable element from *Aplysia californica* (sea slug); PHD, plant homeodomain; PmRAG1L, *Patiria minata* (bat starfish) RAG1-like; PmRAG2L, *Patiria minata* (bat starfish) RAG2-like; RAG1, recombination-activating gene 1; RAG2, recombination-activating gene 2; RSS, recombination signal sequence; SpRAG1L, *Strongylocentrotus purpuratus* (purple sea urchin) RAG1-like; SpRAG2L, *Strongylocentrotus purpuratus* (purple sea urchin) RAG2-like; TE, transposable element; TIR, terminal invert repeats; TSD, target site duplication.

adaptive immunity in jawed vertebrate species ranging from cartilaginous fish to primates. V(D)J recombination is the process by which the gene segments are brought together, and the recombination-activating gene (RAG) proteins 1 and 2 mediate the site-specific DNA double-stranded breaks necessary for this process [1,2].

Much work has been done to characterize the RAG proteins and delineate their biochemical reaction. Key features relevant to the evolution of these proteins will be highlighted here, but the reader is directed to additional reviews and papers for a more detailed summary of RAG protein structure and activity [3–6]. V(D)J recombination begins with RAG binding to the recombination signal sequences (RSSs) that demarcate the gene segments of the antigen receptor loci (Fig. 1A). These sequences consist of two conserved motifs, the heptamer and the nonamer, interrupted by a less well-conserved spacer sequence of 12 or 23 bp [7] (Fig. 2B). The length of the spacer defines the RSS as either a 12RSS or a 23RSS, and efficient recombination occurs only when the RAGs bind one 12RSS and one 23RSS (the '12/23 rule'). Binding of a RAG1/RAG2 heterotetramer together with the high mobility group protein B1 or B2 (HMGB1 or HMGB2) to one RSS and synapsis with a partner RSS allows for the DNA cleavage reaction to proceed (Fig. 1B,C). Nicking of the top strand of DNA just 5′ of the heptamer leaves a free 3′ hydroxyl group that attacks the bottom strand through a direct transesterification reaction, leading to the formation of a DNA hairpin intermediate [8,9] (Fig. 1C). This generates two types of ends, the hairpin coding ends, which contain the gene segments (Fig. 1D), and the signal ends, which contain the RSSs (Fig. 1E). *In vivo*, coding and signal ends are processed by the nonhomologous end joining (NHEJ) pathway [10,11] to yield coding (Fig. 1F) and signal (Fig. 1G) joints, respectively. *In vitro*, however, the 'signal end complex' (consisting of the RAG proteins bound to the signal ends; Fig. 1E) can efficiently attack double-stranded 'target' DNA with a characteristic 5 bp offset, or stagger, on the two strands. This RAG-mediated transposition reaction integrates the signal ends and intervening DNA into the target with the staggered attack generating a target site duplication (TSD) that is typically 5 bp in length (Fig. 1H) [12,13].

Both RAG proteins can be truncated to an enzymatically active core portion [14] (Fig. 2A), and functional and structural domains in both the core and noncore regions have been defined. For RAG1, the core region (amino acids 384–1008 in the mouse protein) contains several DNA-binding domains. The region that makes contacts with the RSS nonamer, the nonamer-binding domain (NBD), extends away from the rest of the core on a flexible hinge [4,5,15], while heptamer contacts are made by residues located in multiple, more C-terminal portions of the RAG1 core [5]. The RAG1 core also contains three critical acidic residues (D600, D708, E962 in the mouse protein) that coordinate magnesium ions in the active site of the enzyme [16–18] and harbors a structural zinc atom that is coordinated by amino acids located in two regions that are widely separated in the primary amino acid sequence [4,5,19]. The noncore portions of RAG1 enhance V(D)J recombination activity [20–25], have E3 ubiquitin ligase activity (contained in an unusual RING/zinc finger domain) [26,27], and have been suggested to play a role in protein stability [26], RAG1 dimerization [28,29], and in mediating interactions with a ubiquitin ligase complex [30] and components of the NHEJ pathway [31,32]. The core region of RAG2 (amino acids 1–352 in the mouse protein; Fig. 2A) is made up of a single domain consisting of a six-bladed beta propeller that interacts with RAG1 and with the coding segment DNA that flanks the heptamer of the RSS [4,5,33]. The noncore region of RAG2 consists of a flexible, acidic linker followed by a plant homeodomain (PHD) that meditates the interaction between RAG2 and open chromatin through direct binding of the N-terminal tail of histone 3 when lysine 4 is trimethylated (H3K4me3) [34,35]. The distal C-terminal portion of RAG2 contains a nuclear localization sequence as well as a residue (T490 in the mouse protein) that when phosphorylated by a cyclin-dependent kinase targets the protein for degradation by the proteasome [36,37]. It is interesting to note that while RAG1 appears to contain all of the domains necessary to bind and cleave the RSS, substantial levels of activity require both RAG proteins.

The transposon/split receptor gene hypothesis

Since the discovery of V(D)J recombination, the similarities between this process and that of cut-and-paste transposition have been highlighted [38]. The RSSs resemble the terminal inverted repeats (TIRs) that target DNA binding and cleavage by the transposase, and the nick-hairpin DNA cleavage reaction mediated by RAG bears deep mechanistic similarities to that mediated by several families of transposases [9,39]. Also notable in this regard is the compact structure of

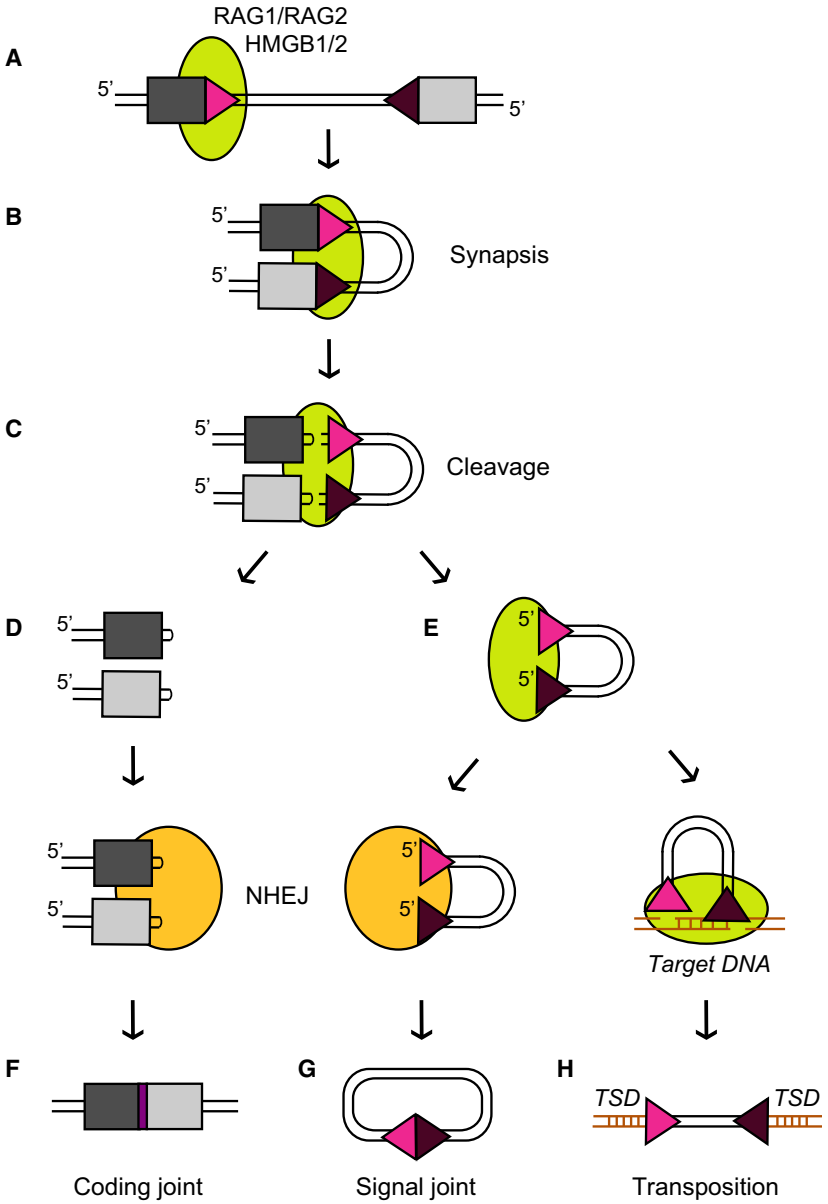

Fig. 1. Outline of RAG DNA cleavage reaction and products. RAG-mediated cleavage begins with the binding of RAG1/RAG2 along with HMGB1/2 (green oval) to a single RSS (triangle) (A). Synapsis with a partner RSS (B) allows for the cleavage reaction to proceed (C), specifically enabling the hairpin formation step of the nick-hairpin cleavage mechanism. Note that the reaction is most efficient with one 12RSS (pink triangle) and one 23RSS (purple triangle), a restriction known as the 12/23 rule. After cleavage, two types of products are generated. The hairpins are present on the DNA ends containing the gene segments, known as the coding ends (D). They are opened and processed by the NHEJ pathway (orange oval) to generate the coding joint (F). The blunt DNA ends containing the RSSs, known as the signal ends (E), are also usually handed over to the NHEJ pathway to be ligated together, forming the signal joint (G). See ref. [3] for a more detailed summary of this reaction. However, the signal ends also have the potential to undergo a transposition reaction in which the free 3′ hydroxyl groups attack a target piece of DNA (brown) with a stagger of 5 bp between the top and bottom strands, generating the TSD and integrating the RSSs and intervening DNA into the target DNA (H). This transposition reaction can lead to genome instability and is very rare *in vivo*.

the *RAG* locus, with *RAG1* and *RAG2* being found adjacent to one other and convergently transcribed (Fig. 3A) in all jawed vertebrate genomes characterized to date, with an intergenic distance that is typically < 10 kb. Furthermore, in many species including rodents and primates, each *RAG* open

reading frame is contained in a single large exon [1,2,40,41].

These similarities along with the demonstration of RAG-mediated transposition provided support for the transposon/split receptor gene hypothesis for the origins of V(D)J recombination [38,42,43]. This hypothesis states that a transposable element (TE) containing *RAG1-like* and *RAG2-like* genes and flanked by TIRs that resembled RSSs (hereafter referred to as the RAG transposon), gave rise to the gene segments of the antigen receptor loci and to *RAG1* and *RAG2*. The pivotal evolutionary event is proposed to have been the insertion of a RAG transposon into an exon of a cell surface receptor gene, interrupting the exon with a TIR-flanked fragment and marking the two portions of the exon for reassembly. Expression of the *RAG1*/*RAG2* transposase genes from another site in the genome (perhaps a distinct integration of the RAG transposon) would have provided the necessary enzyme in *trans* to bind the TIRs and generate the DNA double-stranded breaks needed to recreate a functional receptor gene. No additional RAG transposon integration event would have been necessary for generation of the known antigen receptor loci [41], making this an attractive hypothesis that accounts for all of the key building blocks of this system from a single origin.

Identifying ancient relatives of RAG1 and RAG2

While the idea that a RAG transposon gave rise to the antigen receptor loci and the RAG proteins has been a dominant hypothesis for a number of years [39,42,43], identifying potential precursor elements and linking them to the modern day proteins proved challenging. Early clues were derived from the comparison of RAG cleavage biochemistry to that used by the cut-and-paste class of TEs. The lack of covalent bond formation between RAG and the DNA during cleavage and the use of three acidic residues in the catalytic triad to coordinate metal cations placed the RAG transposon in the DDE family of TEs [16–18]. Like RAG, these elements cleave their target DNA through nicking and transesterification and some members, such as Tn5, Tn10, and Hermes, also generate a hairpin intermediate [44–46]. However, none of these elements contained significant homology to the vertebrate RAGs. Characterization of RAG-mediated transposition provided an additional set of clues in the search for the primordial RAG TE as it revealed the TSD generated by RAG to be predominantly 5 bp in length with a preference for GC-rich integration sites [12,13,47].

Transib

The subsequent identification of the *Transib* family of TEs finally provided a candidate with sequence similarity to the core region of RAG1, including conservation of the catalytic residues [48] (Fig. 2A). In addition, the TIRs of the *Transibs* have some sequence similarity with the RSS, with a well-conserved heptamer that includes the 5′ CAC residues critical for RAG-mediated cleavage (Fig. 2B). Subsequent biochemical characterization of an active member of the *Transib* family, Hztransib, named after its host organism, *Helicoverpa zea* (commonly known as corn earworm), demonstrated a similar cleavage mechanism and reaction polarity to that of the RAG reaction, leaving hairpins on the DNA flanking the TE excision site [49]. Like RAG-mediated transposition, Hztransib also generates 5 bp TSDs and has a preference for GC-rich integration sites [48,49].

RAG1-like and RAG2-like proteins

While the discovery of the *Transibs* provided a candidate for a primordial RAG TE, ascertaining whether a transposon containing *RAG1-like* and *RAG2-like* genes ever existed, and if so, piecing together its evolutionary history, has been difficult. Members of the *Transib* family contain only a *RAG1-like* gene (Fig. 3) [48,50] leaving the origins of *RAG2* uncertain and hinting at independent origins for the two *RAG* genes. The picture was further complicated with the identification of adjacent *RAG1-like* and *RAG2-like* genes in the purple sea urchin (Fig. 3) [51]. Like Transib, the purple sea urchin RAG1-like (SpRAG1L) protein shares sequence similarity with the core of RAG1 including the catalytic residues, but unlike Transib, the similarity extended to include portions of the N-terminal RING domain. While the purple sea urchin RAG2-like (SpRAG2L) protein lacks extended sequence similarity to RAG2, it is predicted to contain an N-terminal six-bladed beta propeller domain and a C-terminal PHD finger, as is the case for vertebrate RAG2 [43,51] (Fig. 2A). It was subsequently found that while the RAG2 PHD binds H3K4 trimethyl, the SpRAG2L PHD binds H3K4 dimethyl [52]. When coexpressed, the purple sea urchin RAG-like proteins were able to interact with each other, and SpRAG1L was also capable of interacting with shark RAG2 [51], highlighting potential similarities between the purple sea urchin proteins and the vertebrate RAGs. In addition, *SpRAG1L* and *SpRAG2L* are coordinately expressed in embryonic and adult sea urchin cells [51], similar to the coordinate expression of vertebrate *RAG1* and

RAG2. However, no endogenous function or DNA cleavage, recombination, or transposition activity had been attributed to these proteins, leaving their relationship to the vertebrate RAGs uncertain. The lack of TIRs flanking the *SpRAG1L-SpRAG2L* locus also made their relationship to the *Transibs* and the putative RAG transposon difficult to ascertain.

More clues to the existence of the RAG transposon and the evolutionary history of RAG were recently provided by the identification of additional *RAG-like* genes or gene fragments in the genomes of chordates such as the green sea urchin, amphioxus, and starfish. The green sea urchin *RAG1-like* (*LvRAG1L*) gene, though harboring multiple inactivating mutations, is predicted to encode protein fragments with 50% sequence identity to SpRAG1L [53]. The green sea urchin *RAG2-like* (*LvRAG2L*) gene, which lies adjacent to *LvRAG1L* in convergent transcriptional orientation, is potentially intact and can encode a protein with 48% identity to SpRAG2L [53]. Hence, these two sea urchin species contain tandem *RAG-like* genes that are strongly related. Interestingly, the green and purple sea urchin *RAG-like* loci are located in nonsyntenic regions of the genomes of the two species. This is consistent with the possibility that the two loci derived from two independent transposon insertion events,

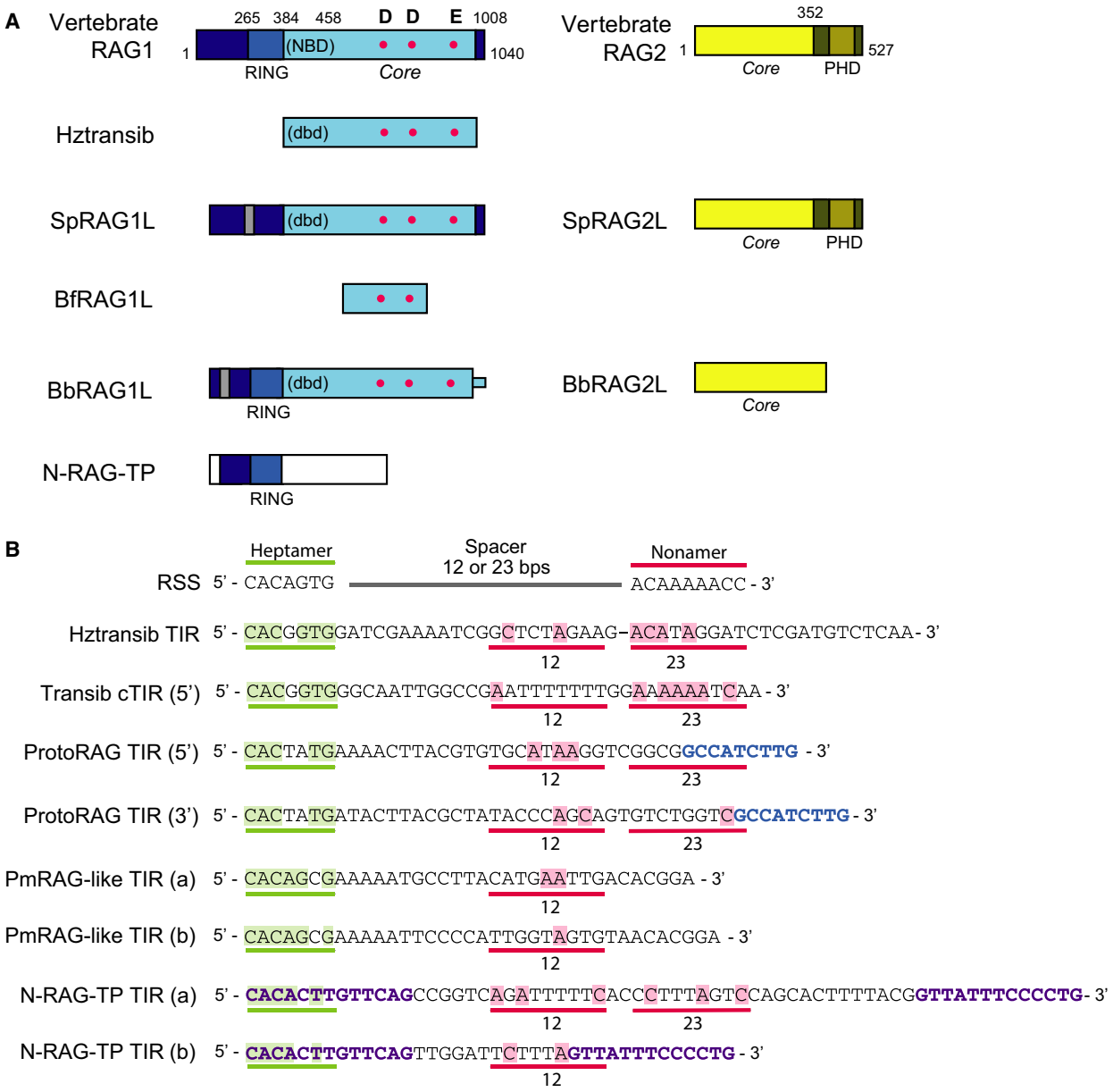

Fig. 2. Comparison of RAG and RAG-like proteins: domain structure and DNA-binding sequences. (A) The vertebrate RAG1 protein can be truncated to a catalytically active core region (amino acids 384–1008 in the mouse protein; light blue). This contains DNA-binding regions, such as the nonamer-binding domain (NBD), as well as the three residues that make up the catalytic triad (D600, D708, and E962 in the mouse protein; red dots). The N-terminal noncore region of RAG1 contains a RING/zinc finger (RING) that coordinates four zinc atoms [26,27]. Transib contains sequence similarity only to the core of RAG1, and while it may contain a DNA-binding domain (dbd), it but does not have strong sequence similarity to the RAG1 NBD [48]. BfRAG1L contains sequence similarity to only a central portion of RAG1 core, and is therefore missing the last residue of the catalytic triad [54]. BbRAG1L contains sequence similarity that extends into the N-terminal noncore region of RAG1, spanning almost all of the RING/zinc finger region, but similarity is higher in the core [57], while SpRAG1L contains only limited sequence similarity to the RAG1 RING/zinc finger region [51]. These two proteins might contain a dbd positioned similarly to the NBD, but do not have sequence similarity to the RAG1 NBD. While HzTransib transposase also lacks sequence similarity to the NBD, some Transib transposases contain NBD-like sequences [53]. Both SpRAG1L and BbRAG1L also contain a series of repeats (gray) but in different locations in their N-terminal regions. Note that the core region of BbRAG1L extends to the C terminus of the protein, unlike vertebrate RAG1. N-RAG-TP contains sequence similarity solely to the RAG1 N-terminal noncore region. The vertebrate RAG2 protein can be truncated to the core region (amino acids 1–352 in the mouse protein; light yellow), consisting of six kelch repeats which fold into a six-bladed beta propeller, and the noncore PHD (dark yellow). Purple sea urchin and amphioxus contain RAG2-like proteins, but BbRAG2L is missing the PHD finger. The RAG-like proteins from the green sea urchin and bat starfish are not included as their sequences are not well established [53]. No RAG2-like protein has been reported in *Aplysia*. (B) The RSS consists of a well-conserved heptamer (green), a spacer that is either 12 or 23 bp, and a well-conserved nonamer (pink). The only invariant residues in the RSS are the first three (5′-CAC) of the heptamer. The consensus sequence of the *Hztransib* TIRs [49], the *Transib* family TIRs [48], and the 5′ and 3′ TIRs reported for *ProtoRAG* [57], the bat star (*PmRAG-like*) [53], *and N-RAG-TP* from *Aplysia* are aligned. The corresponding location of the heptamer is underlined in green, and the corresponding location of the nonamer given either a 12 or 23 bp spacer is underlined in pink. *ProtoRAG* TIRs contain a 9 bp sequence (blue) that is well conserved and is separated by either 27 or 31 bp from the heptamer while *N-RAG-TP* has two conserved, distinct tridecamer sequences (purple) separated by either 39 or 13 bp. Note that all TIRs of *RAG-like* TEs have strong conservation of residues in the heptamer (residues highlighted in green), and that alignment of the *Hztransib* TIR has been shifted by 1 bp for better alignment of the nonamer. Residues with identity to the nonamer are highlighted in pink.

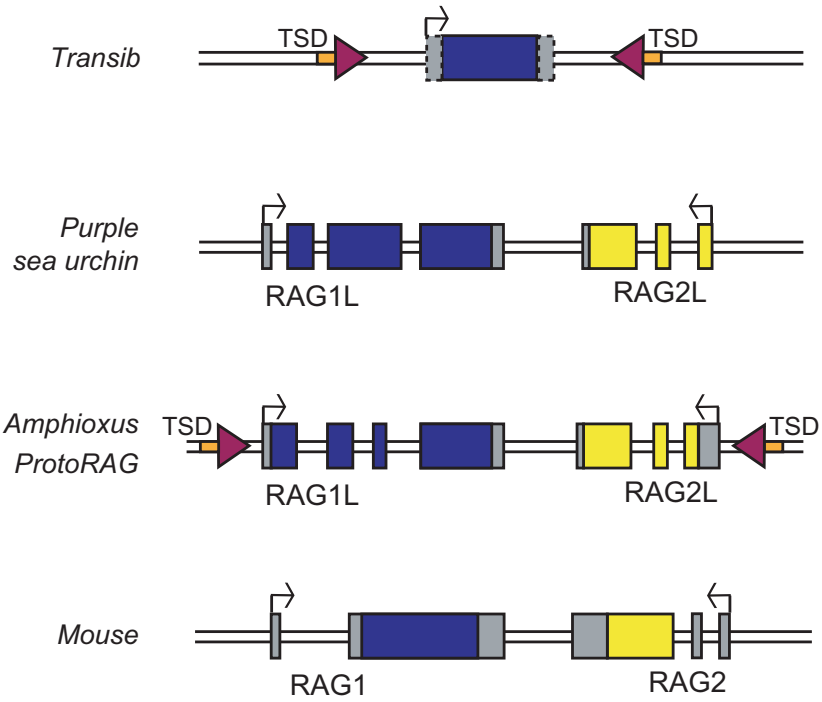

Fig. 3. RAG and RAG-like genes. The structure of the vertebrate *RAG* locus and of several *RAG-like* genes or TEs is depicted schematically [51,57]. *Transib* and the *ProtoRAG* element from amphioxus contain TIRs (purple triangles) and 5 bp TSDs (orange boxes) [49,57]. *Transib* shares sequence similarity to *RAG1* and does not contain a *RAG2-like* gene [48]. The coding regions for *RAG1/RAG1-like* genes and *RAG2/RAG2-like* genes are in blue and yellow, respectively, while gray boxes represent untranslated portions of exons. Start sites of transcription are represented with arrows. The 5′ and 3′ untranslated regions of the Transib transposase gene are not well defined (hatch-marked boxes).

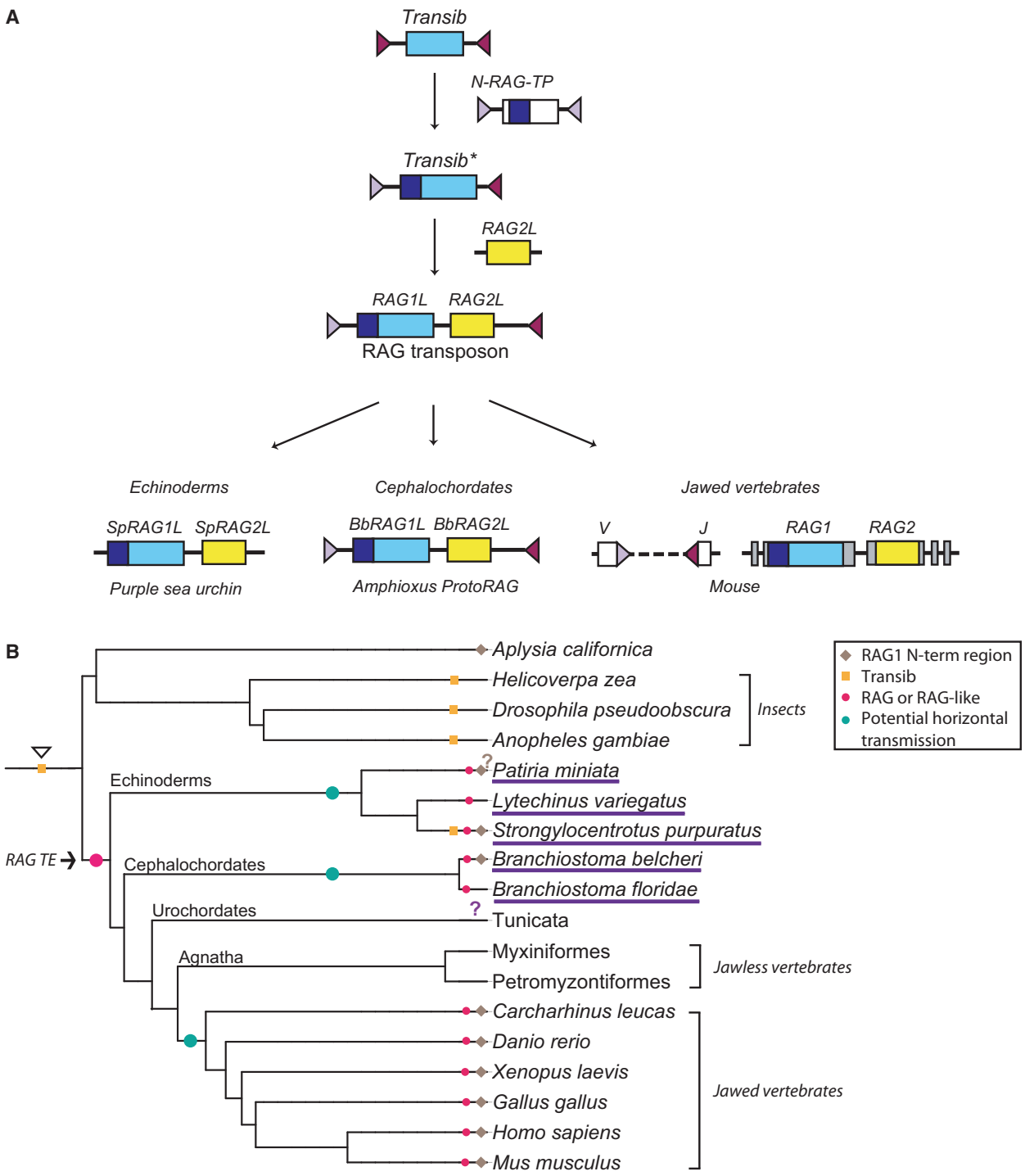

although there is no evidence of TIRs or TSDs in either locus [53]. The bat star genome also appears to contain adjacent, convergently oriented *RAG1-like* (*PmRAG1L*) and *RAG2-like* (*PmRAG2L*) genes that encode predicted proteins or protein fragments with substantial sequence similarity to the SpRAG-like proteins [53]. Although the bat star genome assembly is incomplete, comparison of sequences flanking one copy of *PmRAG1L* to the (as yet incomplete) bat star genome assembly revealed low copy number repeat sequences with well-defined boundaries, the ends of which contain 13 bp identical sequences with clear

Fig. 4. Model for the evolution of the RAG proteins and transmission of the ancestral RAG transposon. (A) We propose that *RAG1* originated from an ancient relative of the *Transib* TEs. A recombination event between this ancient element and a relative of *N-RAG-TP* could have generated a new element, *Transib**, containing an open reading frame containing both the noncore N-terminal domain and core region of the RAG1 precursor, as well as one new TIR. Subsequent acquisition of a *RAG2-like* gene by *Transib** led to the emergence of the RAG transposon that gave rise to the *RAG* and *RAG-like* genes found in echinoderms, cephalochordates, and jawed vertebrates. In the sea urchin, the TIRs of the RAG-like element appear to have been lost while in amphioxus, the TIRs have been maintained and the *ProtoRAG* element is active *in vitro* and may retain activity *in vivo*. In jawed vertebrates, the TIRs went on to become the RSSs after being inserted into a gene (the ancestral split receptor gene) that gave rise into the antigen receptor loci as predicted by the transposon/split receptor gene hypothesis [38,42,43]. *RAG1/RAG1-like* and *RAG2/RAG2-like* genes are in blue and yellow, respectively, and the N-terminal noncore region of RAG1 is in dark blue. TIRs and RSSs are purple triangles. No attempt has been made to depict the origins of RAG2 C-terminal region containing the PHD, although the most parisomonious hypothesis is that it was present in *RAG2L* of the RAG transposon. (B) We propose that the RAG transposon emerged in the genome of a common deuterostome ancestor (arrow and large pink dot), leading to the existence of *RAG-like* genes in numerous lineages (small pink dots). The widespread presence of these genes can be accounted for through vertical transmission of the RAG TE and loss of *RAG-like* genes in the jawless fish and at least some tunicates. A model involving horizontal transmission is also possible, and in this case, three independent integration events (teal dots) of a *RAG* TE would have been required to explain the presence of *RAG-like* genes in various lineages. Orange squares mark the presence of *Transib* TEs [48] and the presumed presence of ancient *Transib* TEs (open arrow head) prior to the divergence of protostomes and deuterostomes. Organisms in which *RAG1-like* genes have been reported are underlined in purple. The presence or absence of RAG1-like genes in tunicates has not been definitively determined (purple question mark). The N-terminal noncore domain may have originated from a relative of the N-RAG-TP element reported in *Aplysia californica*. Species with a RAG1-like protein containing the N-terminal domain are marked with a brown diamond. It is not clear whether the N-terminal region of the bat star RAG1-like has homology to RAG1 (brown question mark).

resemblance to the RSS heptamer (Fig. 2B). Hence, *PmRAG1L-PmRAG2L* might be flanked by TIRs that resemble the RSS, and additional analysis raised the possibility of a 5 bp TSD in one set of adjacent contigs [53]. Finally, an early study of the amphioxus genome identified a region encoding a RAG1-like protein fragment (BfRAG1L) with sequence similarity solely to a central portion of vertebrate RAG1 [54] (Fig. 2A). Notably, this fragment exhibited endonuclease activity, and when reconstituted with the missing portions of the RAG1 core, the resulting chimeric protein was capable of mediating V(D)J recombination when paired with mouse RAG2 [54]. Identification of these RAG-like proteins in various organisms expanded the evidence in favor of the existence of a RAG transposon that was more ancient and widespread than previously thought. Currently, nothing is known about the function or biochemical properties of the RAG-like proteins from the green sea urchin and the bat star.

Functional links between RAG and its ancient relatives

Some progress was made toward piecing together the relationship between RAG and various RAG-like proteins by our recent study that utilized a highly sensitive assay for V(D)J recombination in mouse fibroblasts. These experiments revealed that both Hztransib and SpRAG1L could mediate V(D)J recombination when paired with mouse RAG2 [55], providing the first functional link between these proposed ancient relatives and vertebrate RAG1. Like SpRAG1L, Hztransib was shown to be able to interact physically with shark RAG2 and mouse RAG2, suggesting functional similarities between Hztransib and RAG and RAG-like proteins. This study also demonstrated, as had first been suggested during the original discovery of RAG1 [1], that RAG1 has low levels of V(D)J recombination activity in the absence of RAG2 [55], a result also obtained in *RAG2*-deficient mice [56]. Together, these result illustrated striking parallels between RAG1 and Transib: both proteins have the capacity to function in the absence of RAG2, and yet both also have the capacity to interact physically and functionally with RAG2. We therefore favor the hypothesis that a *Transib* element was the original source of *RAG1*. These experiments also revealed that recombination by RAG1 in the absence of RAG2 was not substantially more efficient on a 12/23 RSS pair than on a 12/12 RSS pair, in contrast to recombination mediated by RAG1 with RAG2, which strongly favors the 12/23 pair. This hints at a potential role for RAG2 in helping to establish the 12/23 rule during the evolution of V(D)J recombination.

In this same study, biochemical assays documented the ability of RAG2 to stimulate transposition activity by Hztransib on substrates containing *Transib* TIRs and on substrates with a pair of 23RSSs or a 12/23RSS pair [55]. Curiously, Hztransib transposase was capable of mediating transposition of a substrate containing a pair of 12RSSs in the absence of RAG2, and this activity was heptamer-dependent but nonamer-independent, consistent with heptamer (but not

nonamer) conservation in the *Hztransib* TIR and the lack of a recognizable nonamer-binding domain in Hztransib transposase. These results reveal the ability of mouse RAG2 to alter the biochemical activity of Hztransib transposase and lead us to suggest that collaboration between a RAG2-like protein and an early RAG1-like Transib would have led to enhanced transposition activity and perhaps altered TIR substrate preferences, with implications for how to integrate the various RAG-like proteins into the evolutionary history of the vertebrate RAGs (see Model below).

ProtoRAG: the missing link

Prior to the identification of *RAG-like* genes in the purple sea urchin, it had been presumed that the RAG transposon was introduced into the genome of a common jawed vertebrate ancestor by horizontal transfer from another species [13,42]. After this discovery, however, a different possibility was raised [43,51]: that linked *RAG1-like* and *RAG2-like* genes existed in an early chordate ancestor and were passed down to vertebrates and echinoderms by the more conventional vertical transmission process (discussed further below). What remained unresolved on this alternative model was whether the vertically transmitted element was a RAG transposon, or was instead simply linked *RAG1-like* and *RAG2-like* genes that lacked TIRs and transposon function. The primary reason for uncertainty was that no active TE fulfilling the criteria for a RAG transposon had been identified in any species, leading to doubts as to whether the RAG transposon ever actually existed. The discovery of *ProtoRAG* [57] puts these doubts to rest.

The *ProtoRAG* superfamily of cut-and-paste transposons was identified in amphioxus (also known as the lancelet), a cephalochordate with a genome that exhibits extreme polymorphism and a remarkably high diversity of TEs [58]. In all identified copies of *ProtoRAG*, the open reading frames were closely flanked by extended inverted repeat sequences that terminate in identical 7 bp sequences. Both the sequence analysis and functional data clearly indicate that these inverted repeats constitute the TIRs of *ProtoRAG*. Like *Transib*, *ProtoRAG* TIRs have sequence similarity to the RSS heptamer (Fig. 2B) and are flanked by 5 bp TSDs [57]. Unlike *Transib*, however, *ProtoRAG* contains both a *RAG1-like* (*BbRAG1L*) and a *RAG2-like* (*BbRAG2L*) gene, oriented in a tail-to-tail, convergently transcribed orientation (Fig. 3). BbRAG1L displays sequence similarity to vertebrate RAG1 throughout most of the core, including conservation of active site residues and zinc coordinating ligands, but lacks similarity to the NBD of RAG1 (Fig. 2A), and correspondingly, *ProtoRAG* lacks sequence similarity in its TIRs to the RSS nonamer (Fig. 2B). BbRAG1L also exhibits sequence similarity to SpRAG1L, and curiously, both proteins contain a block of highly repeated amino acid sequence in their N-terminal regions, although the repeats differ in sequence and length and are inserted at different locations in the two proteins. In addition, BbRAG1L shares sequence similarity to the noncore N-terminal RING/zinc finger of RAG1, with conservation of nearly all of the zinc coordinating residues of this domain. BbRAG2L, like SpRAG2L, shares low sequence similarity to RAG2 but contains residues predicted to allow the protein to adopt a beta propeller structure. Indeed, computer modeling predicts that BbRAG1L and BbRAG2L contain secondary structure elements very similar to those found in the RAG1 and RAG2 core regions, respectively, and have the potential to fold into tertiary structures similar to those adopted by the RAG cores (M. Surleac & A. Petrescu, personal communication). Notably, however, BbRAG2L is missing the entire RAG2 C-terminal region including the PHD finger present in SpRAG2L and RAG2 [57].

Together, BbRAG1L/2L have TIR-dependent DNA cleavage activity *in vitro* that, like RAG, is supported by Mg^{2+} but not Ca^{2+} cations, is stimulated by human HMGB1, and proceeds through a nick-hairpin mechanism [57]. BbRAG1L/2L are also capable of mediating transposition of target sequences flanked by *ProtoRAG* TIRs, and like RAG, they generate predominantly a 5 bp TSD and have a preference for GC-rich integration sites. When expressed in human cells, BbRAG1L/2L can mediate TIR-dependent DNA cleavage of episomal substrates, and the cleaved TIR DNA ends can then undergo transposition or be joined to yield structures resembling the signal joints formed during V(D)J recombination (Fig. 1G,H). In addition, the non-TIR ends (containing the flanking donor DNA) generated by BbRAG1L/2L cleavage can be joined to form structures closely resembling V(D)J coding joints (Fig. 1F). This extensive array of parallels between the sequences and activities of RAG1/2 and the *ProtoRAG* proteins strongly argues for an evolutionary relationship between the two systems. *ProtoRAG* therefore represents the first description of a functional transposable element containing both *RAG1-like* and *RAG2-like* genes.

Model for the evolution of the RAG proteins

The recent work identifying and characterizing various RAG-like proteins has allowed for the formulation of

a more complete and evidence-based model for the evolution of *RAG1* and *RAG2* and the proteins they encode, and argues against an alternative proposal of a viral origin for RAG1 [59]. The similarities between Transib transposase and RAG1 and the ability of Hztransib transposase to mediate recombination when paired with mouse RAG2 provide evidence for a relationship between these proteins [55]. Given that *Transib* is found in the genomes of organisms whose ancestors branched off during eukaryote evolution much earlier than amphioxus, it is likely that *Transib* is an older superfamily of TEs than *ProtoRAG*, and that a *Transib* TE was the evolutionary precursor of *RAG1* and *RAG1-like* genes (Fig. 4A) [48,50]. We refer to this hypothetical element as *Transib**. The Transib* transposase would have been capable of mediating transposition on targets containing its own TIRs, and it is likely that these TIRs contained an RSS heptamer-like sequence necessary for cleavage.

The acquisition of a *RAG2-like* gene by *Transib** would have been the pivotal step in the evolution of the RAG transposon (Fig. 4A). The RAG2-like protein might have enhanced and modulated the transposition activity of the element, consistent with our findings [55], thereby providing a selective advantage for maintaining both proteins. It is very attractive to think that this initial two-gene TE (RAG transposon) was the evolutionary precursor of modern day *ProtoRAG*, which retains transposase function, of the *RAG1L*/*RAG2L* gene pairs observed in echinoderm genomes (whose functions and activities are unknown), and of the *RAG* transposon presumed to have been present in early vertebrate ancestors (Fig. 4A).

From here, it is easy to imagine how the generation of a split receptor gene early in jawed vertebrate evolution could have provided the necessary selective pressure for the development of a more highly active recombinase enzyme in the jawed vertebrate lineage (Fig. 4A). If the receptor gene contributed to organism fitness, for example, by encoding a receptor involved in immune recognition, it would have been advantageous for the organism to reassemble the receptor gene by TE excision, a function provided by the RAG1/RAG2 proteins encoded either by the inserted TE itself or another copy of the TE present elsewhere in the genome. Mutations in the RAG proteins that enhanced their recombination activity while reducing or regulating their transposition activity would then have been positively selected. In this regard, it is noteworthy that BbRAG2L does not contain a PHD finger, as this domain reduces the transposition activity of the RAGs [60–62] but plays an important role in helping the RAG complex localize to sites of open chromatin [34,35,63–65]. Retention of regions such as the PHD could have led to a less active transposase, while additional changes could have enhanced recombination activity allowing for efficient reassembly of the receptor gene. Conversely, loss of the PHD from BbRAG2L might have been important for enhancing transposition of *ProtoRAG* TEs.

In the echinoderm lineage, the RAG transposon might have remained active for an extended period of time. This is suggested by the fact that, as noted above, putative RAG transposon descendants are found in different locations in the green sea urchin and purple sea urchin genomes (Fig. 4A) [53]. Subsequent loss of the TIRs would have immobilized the genes in their current locations and eliminated the selective pressure on the open reading frames to maintain transposase activity. The fact that both *SpRAG1L* and *SpRAG2L* retain intact open reading frames suggests that these proteins have been 'domesticated' to carry out new functions in the purple sea urchin [43,51]. It also appears that *ProtoRAG* elements have been active quite recently during lancelet evolution, as members of the family are found in different genome locations in different individuals [57]. It is unknown if the *ProtoRAG*-encoded proteins have a function in the lancelet aside from that of mediating transposition. It will be of great interest to address this and related questions regarding putative functions of *RAG1L*/*RAG2L* gene pairs in echinoderms.

Unanswered questions, old and new

The origins of RAG2

As depicted in the model (Fig. 4A), the acquisition of a *RAG2-like* gene by a *Transib* transposon was likely a key step in the evolution of the RAG transposon. The origins of *RAG2*, however, remain elusive. Vertebrate RAG2 is composed of a six-bladed beta propeller core linked to a C-terminal noncore PHD finger. Searches for these two domains in predicted protein structures from organisms predating jawed vertebrates did not reveal candidate proteins other than SpRAG2L [51]. Hence, there is currently no strong candidate for the precursor of *RAG2* that is not already linked to a *RAG1-like* gene. The search for a RAG2 predecessor is complicated by several factors. First, while it is likely that the RAG2 predecessor contained a PHD finger (because this domain is found in both SpRAG2 and vertebrate RAG2), this is not certain given the lack of a PHD in BbRAG2L (Fig. 2A) [51,52]. Second, while it is possible to identify many proteins with a propeller structure similar to that of RAG2, it is

difficult to narrow down this list of candidates. And third, the sequence similarity between RAG2 and BbRAG2L or SpRAG2 is considerably lower than that between RAG1 and BbRAG1L, SpRAG1, or Transib, further complicating a comparative genomics approach to identifying RAG2-related sequences [48,51]. Perhaps new genome sequences or biochemical approaches will allow identification of candidates for the predecessor of RAG2.

It has been postulated [66] that the ancestral RAG2 protein was a host factor in the organism that contained *Transib**. The ability of current day RAG2 to interact with Transib transposase lends support to the hypothesis that the ancestral RAG2 protein could also have interacted with the Transib* transposase, potentially enhancing its activity. Therefore, the ancestral RAG2 protein could have influenced the activity of Transib* transposase prior to its incorporation into the RAG transposon, and could have provided benefits that would have helped maintain it as part of the RAG transposon.

TIR asymmetry in *Transib* and the RAG transposon

12RSS/23RSS asymmetry and the 12/23 rule provide an important level of regulation of RAG function and V(D)J recombination. When did such asymmetry first arise during evolution of the system? While most *Transib* TIRs resemble the 23RSS, there is a subset of *Transibs* with asymmetric TIRs that resemble a 12RSS/23RSS pair [48]. Hence, the asymmetry could have arisen as early as *Transib** and hence been a feature of the earliest RAG transposon (see discussion below regarding the RAG1 N-terminal region for speculation on how TIR asymmetry arose). Alternatively, asymmetry might have arisen well after the genesis of the RAG transposon. In either case, the finding that RAG2 strengthens adherence to the 12/23 rule on the part of RAG1 [55] argues that acquisition of a *RAG2-like* gene during formation of the RAG transposon could have strengthened or enabled a preference for asymmetry. Curiously, vertebrate RAG2 specifically facilitates Hztransib-mediated transposition with 23RSS but not 12RSS substrates [55], although Hztransib does not contain a domain with detectable sequence similarity to the NBD of RAG1. The mechanism of this selective stimulation is not known, but it suggests that if *Transib** contained one or two 23RSS-like TIRs, the Transib* transposase might have realized a significant boost in activity when present in cells also expressing the RAG2 precursor.

ProtoRAG TIRs do not contain a sequence similar to that of the RSS nonamer but do contain highly conserved 7 and 9 bp sequences separated by less well-conserved regions of either 27 or 31 bp [57] (Fig. 2B). Hence, *ProtoRAG* elements exhibit TIR asymmetry, with a '27-TIR' upstream of the *BbRAG1L* gene and a '31-TIR' upstream of the *BbRAG2L* gene, and initial functional assays indicate a preference for 27/31 over 27/27 and 31/31 [57]. How strong this preference is, the extent to which it regulates *ProtoRAG* mobilization, and whether BbRAG1L/BbRAG2L cleave DNA in a synaptic complex comparable to the paired complex formed by RAG1/RAG2 and a 12/23RSS pair remain to be determined.

Given the presence of an RSS-like nonamer sequence in many *Transib* TIRs (and a corresponding NBD-like sequence in some Transib transposases [48]), it seems probable that the TIRs of the initial RAG transposon more closely resembled modern day RSSs than *ProtoRAG* TIRs. The lack of an RSS-like nonamer sequence in *ProtoRAG* TIRs is mirrored by the lack of a recognizable NBD in BbRAG1L; a similar situation pertains for *Hztransib* TIRs and transposase. This likely explains why BbRAG1L/BbRAG2L and Hztransib transposase lack substantial activity on RSS substrates [55,57] and suggests that both *ProtoRAG* and *Hztransib* represent evolutionary branches on which the nonamer sequence and its binding domain coevolved away from the nonamer and NBD, respectively.

The evolutionary history of the RAG1 N-terminal region

Transib transposase does not contain sequences similar to the RAG1 N-terminal region, raising the question of the evolutionary origin of this portion of RAG1. A plausible answer came from an unexpected direction with the identification of a TE, named *N-RAG-TP*, in the sea slug *Aplysia californica*, that encodes a putative transposase with extended sequence similarity to the RAG1 N-terminal region including the RING/zinc finger region [67]. The similarity ended abruptly at the RAG1 core, leading to the proposal that the ancestral *RAG1* was created by a recombination event between a *Transib* and an *N-RAG-TP* element [43]. One possibility is that acquisition of the RAG1 N-terminal region occurred after formation of the RAG transposon, in which case *Transib** would have lacked this region. Alternatively, a recent analysis argues that unification of the RAG1 core with the N-terminal region was an early event, preceding even the formation of extant *Transib* TEs [53]. On this model, *Transib**

contained the RAG1 N-terminal region, and *Transibs* (and many other *RAG1-like* genes) experienced the loss of some or all of this region. It is conceivable that a recombination event between a *Transib* TE and an *N-RAG-TP* TE not only unified the RAG1 core and N-terminal regions but also gave rise to TIR asymmetry, as depicted in Fig. 4A. The finding of a region similar to the RAG1 RING/zinc finger in the *ProtoRAG* RAG1-like protein strongly supports the idea that the RING/zinc finger region was an early component of the *RAG1-like* gene in the RAG transposon and demonstrates that this region is compatible with both transposase and recombinase activity. The relevant targets and functional significance of the E3 ligase activity associated with the RAG1 RING/zinc finger region are not well understood.

A curious aspect of the N-terminal region of the *ProtoRAG* and purple sea urchin RAG1-like proteins is the presence of amino acid repeats not found in vertebrate RAG1. For BbRAG1L, this involves 17 copies of variations on the 12-amino-acid sequence PPTADVRATTSQ inserted N-terminal to the RING/zinc finger domain, while for SpRAG1L, it involves 10 copies of variants of the eight-amino-acid sequence TAPLTPTA inserted within the RING/zinc finger domain. The two repeats share a proline-rich character and a stretch of four residues (PPTA; which occurs in 2 of the 10 repeats in SpRAG1L), raising the possibility that the two inserts are related. The origin and functional significance of the repeat regions is not known.

Transmission of the RAG transposon

The identification of RAG1-like and RAG2-like proteins in animals that predate the jawed vertebrates raises the question of when a RAG TE first integrated into the genome of a deuterostome ancestor that gave rise to the jawed vertebrates. *Transibs* are widely dispersed, being found in various insect species and even fungi, organisms that diverged much earlier than vertebrates [48,50]. Adjacent *RAG1-like* and *RAG2-like* genes have been found in echinoderms (sea urchin and starfish), cephalochordates (amphioxus), and jawed vertebrates. Perhaps, the simplest explanation for this lineage distribution of *RAG-like* genes is a vertical transmission model that begins with a *Transib* TE in an ancestral bilaterian (orange square at the base of the tree in Fig. 4B), genesis of the RAG transposon by capture of *RAG2L* by *Transib** in a basal deuterostome (large pink circle, Fig. 4B), and subsequent vertical transmission of the RAG transposon (Fig. 4B). This vertical transmission model accounts for the widespread presence of *RAG-like* genes in the deuterostomes, requires no horizontal transmission events, but requires a loss event in the agnathan lineage leading to the jawless fish, in which no *RAG-like* genes have been found [68], as well as a loss event at some level in the tunicate lineage. *RAG-like* sequences have not been found in the genome of the tunicate *Ciona intestinalis* (the sea squirt), although the *Ciona* genome is thought to be under strong selection to remain small and lacks many genes found in vertebrates and echinoderms [69,70]. The presence or absence of *RAG-like* sequences in other tunicates has not been well documented.

An alternative to the vertical transmission model is one involving horizontal transfer. This would require three independent integration events of the RAG transposon, one each into an ancestral echinoderm, an ancestral cephalochordate, and an ancestral jawed vertebrate (teal circles, Fig. 4B). While more complex, such a scenario offers one possible explanation for the observation that *RAG-like* genes appear to have evolved more slowly in amphioxus than in vertebrates or sea urchin [57]. A successful model will have to accommodate the presence of introns in different locations and different phases in the open reading frame of *RAG-like* genes of amphioxus and sea urchin [57] and the absence of introns in the open reading frame of most vertebrate *RAG1* genes [71]. It will also have to accommodate the aforementioned lack of a recognizable nonamer and NBD in *ProtoRAG* TIRs and the BbRAG1L protein, respectively. Further genome sequencing of invertebrate deuterostome genomes might help to distinguish between the two models and might also help decipher the relationship between the *Transibs*, *ProtoRAG*, and the vertebrate RAGs.

If correct, the vertical transmission model indicates that *RAG-like* genes, and very likely the RAG transposon, existed in the last common ancestor of jawed and jawless vertebrates. The adaptive immune systems of jawed and jawless vertebrates exhibit remarkable parallels including three shared lymphocyte lineages that express diverse, clonally distributed antigen receptors [72,73]. Antigen receptor gene assembly and diversification rely on RAG (for V(D)J recombination) and activation induced deaminase (AID) (for somatic hypermutation/gene conversion) in jawed vertebrates and are thought to rely on cytidine deaminases related to AID in jawless vertebrates [74]. Hence, an ancestral AID protein might have coexisted with RAG1-like/RAG2-like proteins in the last common vertebrate ancestor. Was one or the other (or both) of these enzyme systems active in immune receptor gene

assembly/diversification at this evolutionary stage? If so, what type of receptor was being generated/diversified? Was it composed of immunoglobulin domains (as in jawed vertebrates) or of leucine-rich repeats (as in jawless vertebrates)? If the former, the diversifying locus was subsequently lost in the jawless vertebrate lineage; if the latter, it was lost in the jawed vertebrate lineage. These puzzles cannot be solved readily with current information. It is appealing to think, however, that the last common vertebrate ancestor had substantial raw materials available in the form of RAG, AID, and three functionally distinct lymphocyte-like lineages for the creation of a sophisticated adaptive immune system.

A second implication of the vertical transmission model would be that *RAG1-like*/*RAG2-like* gene pairs substantially preceded *AID-like* genes in evolution, given that the AID/APOBEC family of cytidine deaminases appears to be restricted to vertebrates [75].

Transposase versus recombinase

After DNA cleavage by RAG or BbRAG1L/2L, there are two predominant fates for the excised fragment flanked by RSSs or TIRs (Fig. 1E): joining of the ends to form a signal joint (Fig. 1G) or transposition (Fig. 1H). RAG strongly favors the former outcome. RAG actively directs cleaved signal and coding ends into the NHEJ repair pathway for signal and coding joint formation [76–78], while RAG-mediated transposition is extremely rare *in vivo* [79–82]. In contrast, BbRAG1L/2L, while allowing some TIR-TIR joints to form, appears to strongly favor transposition [57]. These preferred outcomes make sense given the functional imperatives faced by the two enzyme systems. For RAG, end joining accomplishes the goal of V(D)J recombination while transposition threatens genome integrity; for the *ProtoRAG* proteins, transposition equates to the survival of the TE and perhaps is beneficial to the highly diverse genome of the lancelet. The mechanisms that suppress RAG-mediated transposition *in vivo* are poorly understood (see particularly [82]), and similarly, the features of BbRAG1L/2L that favor transposition are not known. While RAG has been shown to interact with DNA repair proteins [31,32], it is not known if this contributes to efficient NHEJ-mediated end joining and/or suppression of transposition. We anticipate that biochemical and structural analyses of Transib transposase and BbRAG1L/2L are likely to be a rich source of information regarding the functional underpinnings of the evolutionary transition from transposase to recombinase.

Concluding remarks

The identification of RAG-like proteins and TEs with similarities to the vertebrate *RAG* genes has provided candidates for functional tests to identify relatives of the long-sought RAG transposon, the element hypothesized to have played a key role in the establishment of V(D)J recombination. The discovery of the *Proto-RAG* superfamily of TEs provides the strongest evidence to date for the existence of the RAG transposon. Together, comparative genomics and functional studies have provided much support for the transposon/split receptor gene hypothesis, and they have begun to shed light on the specific changes and steps this element must have undergone as it evolved from a transposase to a recombinase.

Acknowledgements

We thank Anthony De Tomaso for helpful information regarding tunicate genomes, Sebastian Fugmann for insightful ideas, and Marius Surleac and Andre Petrescu for sharing their models of the protein structures of BbRAG1 and BbRAG2. We also thank Shaochun Yuan and Anlong Xu for helpful comments on the manuscript. Our work on the evolution of the RAG proteins was funded by the Howard Hughes Medical Institute, and LMC received support from a training grant from the National Institutes of Health T32 AI007019.

References

1 Schatz DG, Oettinger MA & Baltimore D (1989) The V(D)J recombination activating gene, RAG-1. *Cell* **59**, 1035–1048.
2 Oettinger MA, Schatz DG, Gorka C & Baltimore D (1990) RAG-1 and RAG-2, adjacent genes that synergistically activate V(D)J recombination. *Science* **248**, 1517–1523.
3 Schatz DG & Swanson PC (2011) V(D)J recombination: mechanisms of initiation. *Annu Rev Genet* **45**, 167–202.
4 Kim MS, Lapkouski M, Yang W & Gellert M (2015) Crystal structure of the V(D)J recombinase RAG1-RAG2. *Nature* **518**, 507–511.
5 Ru H, Chambers MG, Fu TM, Tong AB, Liao M & Wu H (2015) Molecular mechanism of V(D)J recombination from synaptic RAG1-RAG2 complex structures. *Cell* **163**, 1138–1152.
6 Little AJ, Matthews AG, Oettinger MA, Roth DB & Schatz DG (2015) The mechanism of V(D)J recombination. In *Molecular Biology of B cells* (Alt FW, Honjo T, Radbruch A & Reth M, eds), pp. 13–34. Academic Press/Elsevier Limited, London

7 Ramsden DA, Baetz K & Wu GE (1994) Conservation of sequence in recombination signal sequence spacers. *Nucleic Acids Res* **22**, 1785–1796.
8 McBlane JF, van Gent DC, Ramsden DA, Romeo C, Cuomo CA, Gellert M & Oettinger MA (1995) Cleavage at a V(D)J recombination signal requires only RAG1 and RAG2 proteins and occurs in two steps. *Cell* **83**, 387–395.
9 van Gent DC, Mizuuchi K & Gellert M (1996) Similarities between initiation of V(D)J recombination and retroviral integration. *Science* **271**, 1592–1594.
10 Lieber MR (2010) The mechanism of double-strand DNA break repair by the nonhomologous DNA end-joining pathway. *Annu Rev Biochem* **79**, 181–211.
11 Rooney S, Chaudhuri J & Alt FW (2004) The role of the non-homologous end-joining pathway in lymphocyte development. *Immunol Rev* **200**, 115–131.
12 Hiom K, Melek M & Gellert M (1998) DNA transposition by the RAG1 and RAG2 proteins: a possible source of oncogenic translocations. *Cell* **94**, 463–470.
13 Agrawal A, Eastman QM & Schatz DG (1998) Transposition mediated by RAG1 and RAG2 and its implications for the evolution of the immune system. *Nature* **394**, 744–751.
14 Swanson PC (2004) The bounty of RAGs: recombination signal complexes and reaction outcomes. *Immunol Rev* **200**, 90–114.
15 Yin FF, Bailey S, Innis CA, Ciubotaru M, Kamtekar S, Steitz TA & Schatz DG (2009) Structure of the RAG1 nonamer binding domain with DNA reveals a dimer that mediates DNA synapsis. *Nat Struct Mol Biol* **16**, 499–508.
16 Fugmann SD, Villey IJ, Ptaszek LM & Schatz DG (2000) Identification of two catalytic residues in RAG1 that define a single active site within the RAG1/RAG2 protein complex. *Mol Cell* **5**, 97–107.
17 Kim DR, Dai Y, Mundy CL, Yang W & Oettinger MA (1999) Mutations of acidic residues in RAG1 define the active site of the V(D)J recombinase. *Genes Dev* **13**, 3070–3080.
18 Landree MA, Wibbenmeyer JA & Roth DB (1999) Mutational analysis of RAG1 and RAG2 identifies three catalytic amino acids in RAG1 critical for both cleavage steps of V(D)J recombination. *Genes Dev* **13**, 3059–3069.
19 Gwyn LM, Peak MM, De P, Rahman NS & Rodgers KK (2009) A zinc site in the C-terminal domain of RAG1 is essential for DNA cleavage activity. *J Mol Biol* **390**, 863–878.
20 Grundy GJ, Yang W & Gellert M (2010) Autoinhibition of DNA cleavage mediated by RAG1 and RAG2 is overcome by an epigenetic signal in V(D) J recombination. *Proc Natl Acad Sci USA* **107**, 22487–22492.
21 Dudley DD, Sekiguchi J, Zhu C, Sadofsky MJ, Whitlow S, DeVido J, Monroe RJ, Bassing CH & Alt FW (2003) Impaired V(D)J recombination and lymphocyte development in core RAG1-expressing mice. *J Exp Med* **198**, 1439–1450.
22 Jones JM & Simkus C (2009) The roles of the RAG1 and RAG2 "non-core" regions in V(D)J recombination and lymphocyte development. *Arch Immunol Ther Exp (Warsz)* **57**, 105–116.
23 Roman CA, Cherry SR & Baltimore D (1997) Complementation of V(D)J recombination deficiency in RAG-1(-/-) B cells reveals a requirement for novel elements in the N-terminus of RAG-1. *Immunity* **7**, 13–24.
24 Steen SB, Han JO, Mundy C, Oettinger MA & Roth DB (1999) Roles of the "dispensable" portions of RAG-1 and RAG-2 in V(D)J recombination. *Mol Cell Biol* **19**, 3010–3017.
25 McMahan CJ, Difilippantonio MJ, Rao N, Spanopoulou E & Schatz DG (1997) A basic motif in the N-terminal region of RAG1 enhances V(D)J recombination activity. *Mol Cell Biol* **17**, 4544–4552.
26 Yurchenko V, Xue Z & Sadofsky M (2003) The RAG1 N-terminal domain is an E3 ubiquitin ligase. *Genes Dev* **17**, 581–585.
27 Jones JM & Gellert M (2003) Autoubiquitylation of the V(D)J recombinase protein RAG1. *Proc Natl Acad Sci USA* **100**, 15446–15451.
28 Bellon SF, Rodgers KK, Schatz DG, Coleman JE & Steitz TA (1997) Crystal structure of the RAG1 dimerization domain reveals multiple zinc-binding motifs including a novel zinc binuclear cluster. *Nat Struct Biol* **4**, 586–591.
29 Rodgers KK, Bu Z, Fleming KG, Schatz DG, Engelman DM & Coleman JE (1996) A zinc-binding domain involved in the dimerization of RAG1. *J Mol Biol* **260**, 70–84.
30 Kassmeier MD, Mondal K, Palmer VL, Raval P, Kumar S, Perry GA, Anderson DK, Ciborowski P, Jackson S, Xiong Y *et al.* (2012) VprBP binds full-length RAG1 and is required for B-cell development and V(D)J recombination fidelity. *EMBO J* **31**, 945–958.
31 Raval P, Kriatchko AN, Kumar S & Swanson PC (2008) Evidence for Ku70/Ku80 association with full-length RAG1. *Nucleic Acids Res* **36**, 2060–2072.
32 Coster G, Gold A, Chen D, Schatz DG & Goldberg M (2012) A dual interaction between the DNA damage response protein MDC1 and the RAG1 subunit of the V(D)J recombinase. *J Biol Chem* **287**, 36488–36498.
33 Callebaut I & Mornon JP (1998) The V(D)J recombination activating protein RAG2 consists of a six-bladed propeller and a PHD fingerlike domain, as revealed by sequence analysis. *Cell Mol Life Sci* **54**, 880–891.

34 Matthews AG, Kuo AJ, Ramon-Maiques S, Han S, Champagne KS, Ivanov D, Gallardo M, Carney D, Cheung P, Ciccone DN *et al*. (2007) RAG2 PHD finger couples histone H3 lysine 4 trimethylation with V(D)J recombination. *Nature* **450**, 1106–1110.
35 Liu Y, Subrahmanyam R, Chakraborty T, Sen R & Desiderio S (2007) A plant homeodomain in RAG-2 that binds hypermethylated lysine 4 of histone H3 is necessary for efficient antigen-receptor-gene rearrangement. *Immunity* **27**, 561–571.
36 Lin WC & Desiderio S (1994) Cell cycle regulation of V (D)J recombination-activating protein RAG-2. *Proc Natl Acad Sci USA* **91**, 2733–2737.
37 Jiang H, Chang FC, Ross AE, Lee J, Nakayama K, Nakayama K & Desiderio S (2005) Ubiquitylation of RAG-2 by Skp2-SCF links destruction of the V(D)J recombinase to the cell cycle. *Mol Cell* **18**, 699–709.
38 Sakano H, Huppi K, Heinrich G & Tonegawa S (1979) Sequences at the somatic recombination sites of immunoglobulin light-chain genes. *Nature* **280**, 288–294.
39 Jones JM & Gellert M (2004) The taming of a transposon: V(D)J recombination and the immune system. *Immunol Rev* **200**, 233–248.
40 Fugmann SD, Lee AI, Shockett PE, Villey IJ & Schatz DG (2000) The RAG proteins and V(D)J recombination: complexes, ends, and transposition. *Annu Rev Immunol* **18**, 495–527.
41 Hsu E & Lewis SM (2015) The origin of V(D)J diversification. In *Molecular Biology of B Cells* (Alt FW, Honjo T, Radbruch A & Reth M, eds), pp. 133–149. Academic Press/Elsevier Limited, London.
42 Thompson CB (1995) New insights into V(D)J recombination and its role in the evolution of the immune system. *Immunity* **3**, 531–539.
43 Fugmann SD (2010) The origins of the Rag genes–from transposition to V(D)J recombination. *Semin Immunol* **22**, 10–16.
44 Kennedy AK, Guhathakurta A, Kleckner N & Haniford DB (1998) Tn10 transposition via a DNA hairpin intermediate. *Cell* **95**, 125–134.
45 Zhou L, Mitra R, Atkinson PW, Hickman AB, Dyda F & Craig NL (2004) Transposition of hAT elements links transposable elements and V(D)J recombination. *Nature* **432**, 995–1001.
46 Bhasin A, Goryshin IY & Reznikoff WS (1999) Hairpin formation in Tn5 transposition. *J Biol Chem* **274**, 37021–37029.
47 Tsai CL, Chatterji M & Schatz DG (2003) DNA mismatches and GC-rich motifs target transposition by the RAG1/RAG2 transposase. *Nucleic Acids Res* **31**, 6180–6190.
48 Kapitonov VV & Jurka J (2005) RAG1 core and V(D)J recombination signal sequences were derived from Transib transposons. *PLoS Biol* **3**, e181.
49 Hencken CG, Li X & Craig NL (2012) Functional characterization of an active Rag-like transposase. *Nat Struct Mol Biol* **19**, 834–836.
50 Kapitonov VV & Jurka J (2003) Molecular paleontology of transposable elements in the *Drosophila melanogaster* genome. *Proc Natl Acad Sci USA* **100**, 6569–6574.
51 Fugmann SD, Messier C, Novack LA, Cameron RA & Rast JP (2006) An ancient evolutionary origin of the Rag1/2 gene locus. *Proc Natl Acad Sci USA* **103**, 3728–3733.
52 Wilson DR, Norton DD & Fugmann SD (2008) The PHD domain of the sea urchin RAG2 homolog, SpRAG2L, recognizes dimethylated lysine 4 in histone H3 tails. *Dev Comp Immunol* **32**, 1221–1230.
53 Kapitonov VV & Koonin EV (2015) Evolution of the RAG1-RAG2 locus: both proteins came from the same transposon. *Biol Direct* **10**, 20.
54 Zhang Y, Xu K, Deng A, Fu X, Xu A & Liu X (2014) An amphioxus RAG1-like DNA fragment encodes a functional central domain of vertebrate core RAG1. *Proc Natl Acad Sci USA* **111**, 397–402.
55 Carmona LM, Fugmann SD & Schatz DG (2016) Collaboration of RAG2 with RAG1-like proteins during the evolution of V(D)J recombination. *Genes Dev* **30**, 909–917.
56 Montaudouin C, Boucontet L, Mailhe-Lembezat MP, Mariotti-Ferrandiz ME, Louise A, Six A, Freitas AA & Garcia S (2010) Endogenous TCR recombination in TCR Tg single RAG-deficient mice uncovered by robust in vivo T cell activation and selection. *PLoS One* **5**, e10238.
57 Huang S, Tao X, Yuan S, Zhang Y, Li P, Beilinson HA, Zhang Y, Yu W, Pontarotti P, Escriva H *et al*. (2016) Discovery of an active RAG transposon illuminates the origins of V(D)J recombination. *Cell* **166**, 102–114.
58 Huang S, Chen Z, Yan X, Yu T, Huang G, Yan Q, Pontarotti PA, Zhao H, Li J, Yang P *et al*. (2014) Decelerated genome evolution in modern vertebrates revealed by analysis of multiple lancelet genomes. *Nat Commun* **5**, 5896.
59 Dreyfus DH (2009) Paleo-immunology: evidence consistent with insertion of a primordial herpes virus-like element in the origins of acquired immunity. *PLoS One* **4**, e5778.
60 Elkin SK, Matthews AG & Oettinger MA (2003) The C-terminal portion of RAG2 protects against transposition in vitro. *EMBO J* **22**, 1931–1938.
61 Tsai CL & Schatz DG (2003) Regulation of RAG1/RAG2-mediated transposition by GTP and the C-terminal region of RAG2. *EMBO J* **22**, 1922–1930.
62 Swanson PC, Volkmer D & Wang L (2004) Full-length RAG-2, and not full-length RAG-1, specifically suppresses RAG-mediated transposition but not hybrid

joint formation or disintegration. *J Biol Chem* **279**, 4034–4044.

63 Teng G, Maman Y, Resch W, Kim M, Yamane A, Qian J, Kieffer-Kwon KR, Mandal M, Ji Y, Meffre E *et al*. (2015) RAG represents a widespread threat to the lymphocyte genome. *Cell* **162**, 751–765.

64 Ji Y, Resch W, Corbett E, Yamane A, Casellas R & Schatz DG (2010) The in vivo pattern of binding of RAG1 and RAG2 to antigen receptor loci. *Cell* **141**, 419–431.

65 Maman Y, Teng G, Seth R, Kleinstein SH & Schatz DG (2016) RAG1 targeting in the genome is dominated by chromatin interactions mediated by the non-core regions of RAG1 and RAG2. *Nucleic Acids Res* **44**, 9624–9637.

66 Litman GW, Rast JP & Fugmann SD (2010) The origins of vertebrate adaptive immunity. *Nat Rev Immunol* **10**, 543–553.

67 Panchin Y & Moroz LL (2008) Molluscan mobile elements similar to the vertebrate recombination-activating genes. *Biochem Biophys Res Commun* **369**, 818–823.

68 Hirano M, Das S, Guo P & Cooper MD (2011) The evolution of adaptive immunity in vertebrates. *Adv Immunol* **109**, 125–157.

69 Dehal P, Satou Y, Campbell RK, Chapman J, Degnan B, De Tomaso A, Davidson B, Di Gregorio A, Gelpke M, Goodstein DM *et al*. (2002) The draft genome of *Ciona intestinalis*: insights into chordate and vertebrate origins. *Science* **298**, 2157–2167.

70 Azumi K, De Santis R, De Tomaso A, Rigoutsos I, Yoshizaki F, Pinto MR, Marino R, Shida K, Ikeda M, Ikeda M *et al*. (2003) Genomic analysis of immunity in a Urochordate and the emergence of the vertebrate immune system: "waiting for Godot". *Immunogenetics* **55**, 570–581.

71 Flajnik MF & Du Pasquier L (2013) Evolution of the immune system. In *Fundamental Immunology* (Paul WE, ed.), pp. 67–128. Wolters Kluwer Health/Lippincott Williams & Wilkins, Philadelphia, PA.

72 Hirano M, Guo P, McCurley N, Schorpp M, Das S, Boehm T & Cooper MD (2013) Evolutionary implications of a third lymphocyte lineage in lampreys. *Nature* **501**, 435–438.

73 Flajnik MF (2014) Re-evaluation of the immunological Big Bang. *Curr Biol* **24**, R1060–R1065.

74 Rogozin IB, Iyer LM, Liang L, Glazko GV, Liston VG, Pavlov YI, Aravind L & Pancer Z (2007) Evolution and diversification of lamprey antigen receptors: evidence for involvement of an AID-APOBEC family cytosine deaminase. *Nat Immunol* **8**, 647–656.

75 Conticello SG, Thomas CJ, Petersen-Mahrt SK & Neuberger MS (2005) Evolution of the AID/APOBEC family of polynucleotide (deoxy)cytidine deaminases. *Mol Biol Evol* **22**, 367–377.

76 Lee GS, Neiditch MB, Salus SS & Roth DB (2004) RAG proteins shepherd double-strand breaks to a specific pathway, suppressing error-prone repair, but RAG nicking initiates homologous recombination. *Cell* **117**, 171–184.

77 Corneo B, Wendland RL, Deriano L, Cui X, Klein IA, Wong SY, Arnal S, Holub AJ, Weller GR, Pancake BA *et al*. (2007) Rag mutations reveal robust alternative end joining. *Nature* **449**, 483–486.

78 Cui X & Meek K (2007) Linking double-stranded DNA breaks to the recombination activating gene complex directs repair to the nonhomologous end-joining pathway. *Proc Natl Acad Sci USA* **104**, 17046–17051.

79 Chatterji M, Tsai CL & Schatz DG (2006) Mobilization of RAG-generated signal ends by transposition and insertion in vivo. *Mol Cell Biol* **26**, 1558–1568.

80 Curry JD, Schulz D, Guidos CJ, Danska JS, Nutter L, Nussenzweig A & Schlissel MS (2007) Chromosomal reinsertion of broken RSS ends during T cell development. *J Exp Med* **204**, 2293–2303.

81 Reddy YV, Perkins EJ & Ramsden DA (2006) Genomic instability due to V(D)J recombination-associated transposition. *Genes Dev* **20**, 1575–1582.

82 Jiang H, Ross AE & Desiderio S (2004) Cell cycle-dependent accumulation in vivo of transposition-competent complexes between recombination signal ends and full-length RAG proteins. *J Biol Chem* **279**, 8478–8486.